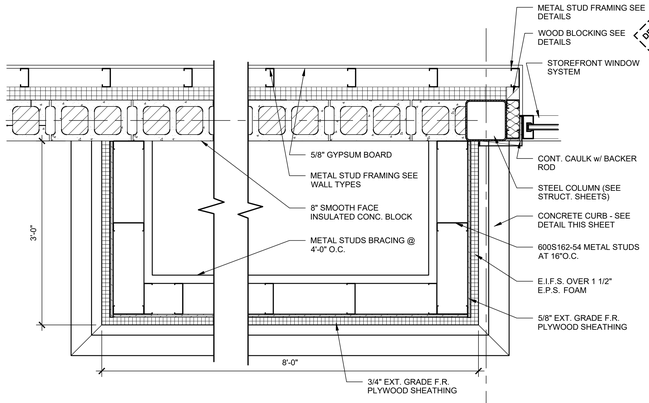

9 A10.0 PLAN AT PILASTER BASE
SCALE: 1" = 1'-0"

DESIGNER NOTE:
1. FOR PROJECTS WITHOUT A PHOTO PLACEMENT, ADD ONE STRIP TO THE ABOVE. THE TRACK SYSTEM TO FLEX THE LEADING EDGE OF THE CANOPY PARAPET.

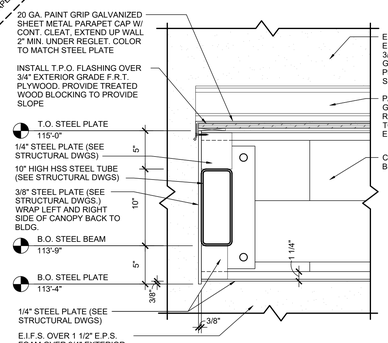

8 A10.0 DETAIL AT CANOPY
SCALE: 1 1/2" = 1'-0"

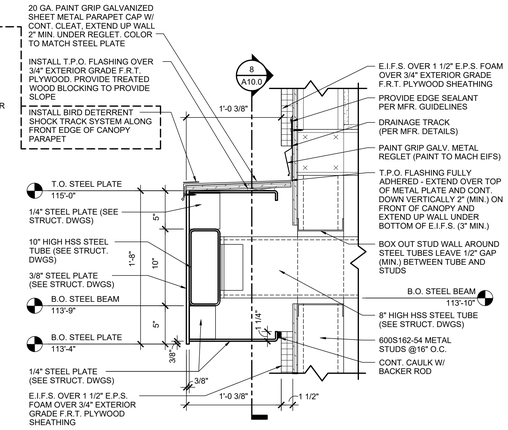

7 A10.0 DETAIL AT CANOPY
SCALE: 1 1/2" = 1'-0"

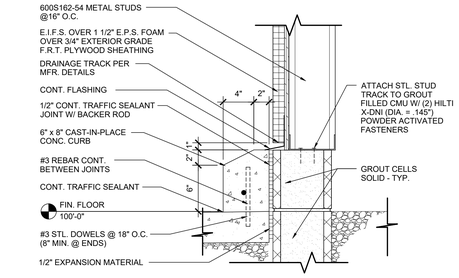

6 A10.0 DETAIL AT CURB
SCALE: 1 1/2" = 1'-0"

DESIGNER NOTE:
1. SHELL PLANS MUST PROVIDE ACCESS TO WALL AREA FOR POWER HOOK UP

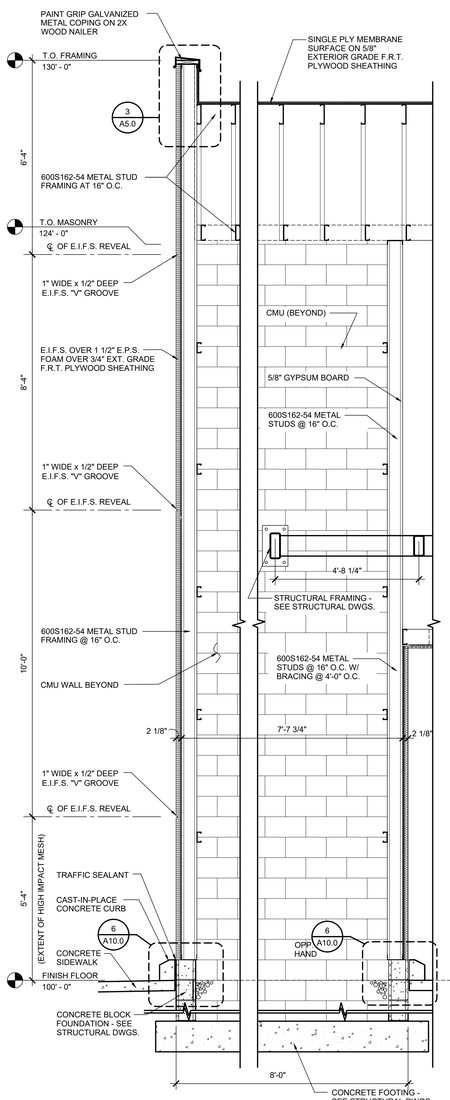

5 A10.0 WALL SECTION THRU PILASTER
SCALE: 1/2"=1'-0"

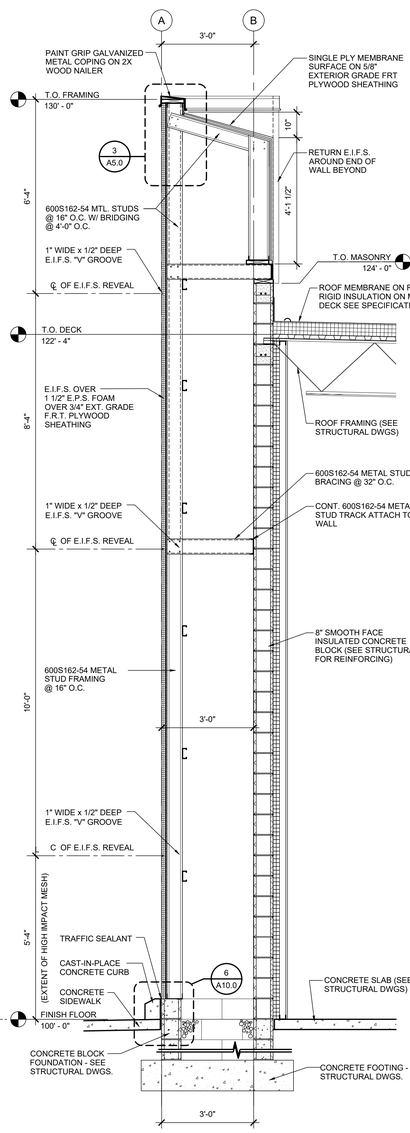

4 A10.0 WALL SECTION THRU PILASTER
SCALE: 1/2"=1'-0"

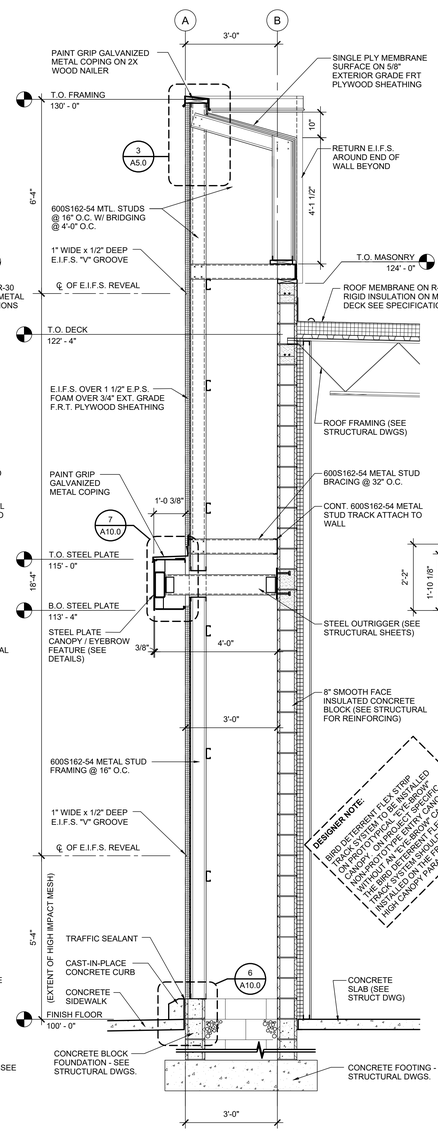

DESIGNER NOTE:
1. BIRD DETERRENT FLEX STRIP TRACK SYSTEM TO BE INSTALLED ON PHOTO PLACEMENT ONLY. CONTACT PETSMART PROJECT MANAGER WITHOUT AN EYEBROW CANOPY. ADAPTER TO BE ADDED TO THE BIRD DETERRENT FLEX STRIP TRACK SYSTEM SHOULD BE INSTALLED ON THE FRONT EYEBROW CANOPY PARAPET.

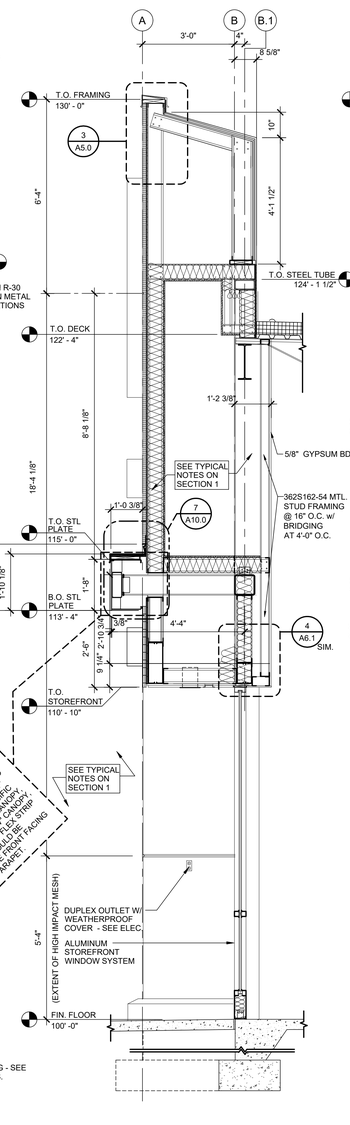

2 A10.0 WALL SECTION THRU STOREFRONT
SCALE: 1/2"=1'-0"

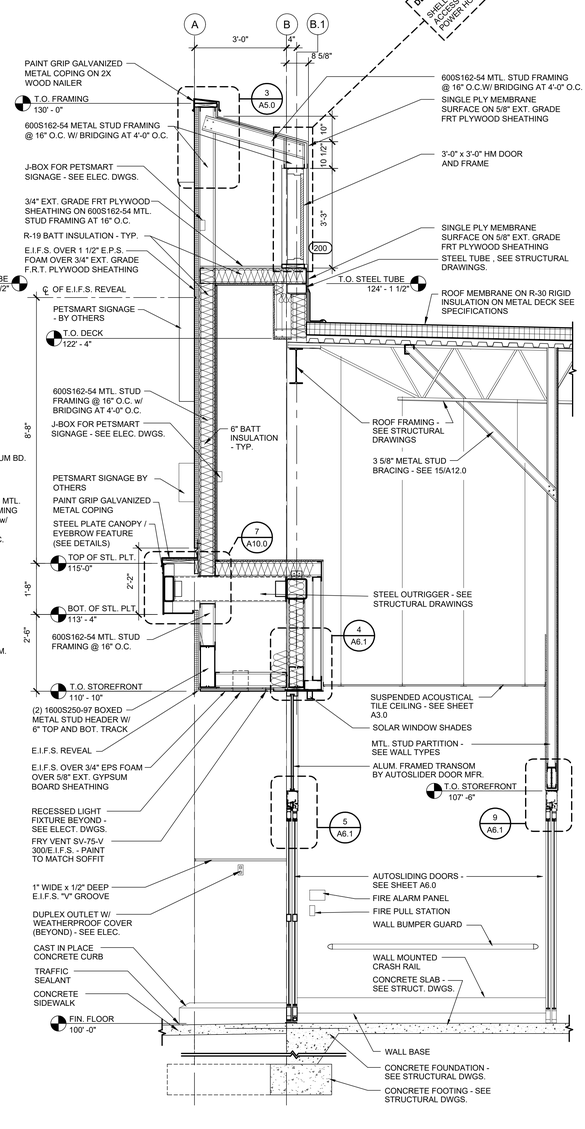

1 A10.0 WALL SECTION THRU VESTIBULE
SCALE: 1/2"=1'-0"

TENANT:

PETSMART

19601 North 27th Avenue
Phoenix, Arizona 85027 - (623) 580-6100

PROJECT:

18K 2025 U.S. VET SERVICES INSTRUCTION SET

FEBRUARY 12, 2025

ARCHITECT:

CONSULTANT:

SEAL:

CITY SEAL:

DISCLAIMER:

THIS DRAWING AND DESIGN IN COPYRIGHT PROTECTED WHICH SHALL NOT BE USED, REPRODUCED OR REVISED WITHOUT WRITTEN PERMISSION BY PETSMART. THE CONTRACTOR SHALL CHECK AND VERIFY ALL DIMENSIONS AND UTILITY LOCATIONS AND REPORT ALL ERRORS AND OMISSIONS PRIOR TO COMMENCING WORK.

THIS DRAWING IS NOT TO BE SCALED.

ISSUED FOR:

#	DESCRIPTION	DATE

PROJECT NO: 18K 2025 US INSTRUCTION SET

ORIGINAL SCALE: AS INDICATED

DRAWN BY: XXX

CHECKED BY: XXX

PAGE # 01 OF: 56

IF THIS BAR IS NOT 1" LONG, ADJUST YOUR PLOTTING SCALE — 1"

DISCIPLINE: ARCHITECTURAL

TITLE:

WALL SECTIONS AND DETAILS

SHEET NUMBER:

A10.0